High Speed Optocoupler, 1 MBd, Photodiode with Transistor Output

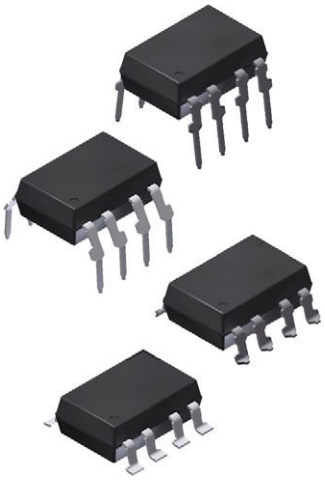

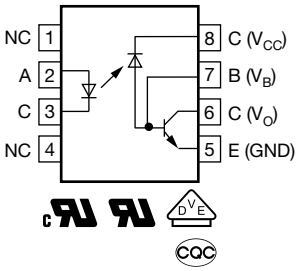

FEATURES

- Isolation test voltages: 5300 V_{RMS}
- TTL compatible
- High bit rates: 1 Mbit/s
- High common-mode interference immunity
- Bandwidth 2 MHz
- Open-collector output
- External base wiring possible
- Material categorization: for definitions of compliance please see www.vishay.com/doc?99912

Pb-free
e3
RoHS COMPLIANT
HALOGEN FREE
GREEN (5-2008)

AGENCY APPROVALS

- UL1577 file no. E52744, double protection
- DIN EN 60747-5-5 (VDE0884-5) available with option 1
- cUL components acceptance service no. 5A
- CQC GB8898-2011, GB4943.1-2011

DESCRIPTION

The 6N135 and 6N136 are optocouplers with a GaAlAs infrared emitting diode, optically coupled with an integrated photo detector which consists of a photo diode and a high-speed transistor in a DIP-8 plastic package.

Signals can be transmitted between two electrically separated circuits up to frequencies of 2 MHz. The potential difference between the circuits to be coupled should not exceed the maximum permissible reference voltages.

ORDERING INFORMATION

6	N	1	3	#	-	X	0	#	#	T
PART NUMBER						PACKAGE OPTION				TAPE AND REEL

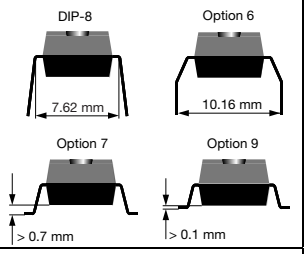

AGENCY CERTIFIED / PACKAGE	CTR (%)	
UL, CSA	**≥ 7**	**≥ 19**
DIP-8	6N135	6N136
DIP-8, 400 mil, option 6	-	6N136-X006
SMD-8, option 7	6N135-X007T (1)	6N136-X007T (1)
SMD-8, option 9	-	6N136-X009T (1)
VDE, UL, CSA	**≥ 7**	**≥ 19**
DIP-8	-	6N136-X001
SMD-8, option 7	6N135-X017T (1)	6N136-X017T
SMD-8, option 9	-	6N136-X019T

Note

(1) Also available in tubes; do not add T to end

For technical questions, contact: optocoupleranswers@vishay.com
THIS DOCUMENT IS SUBJECT TO CHANGE WITHOUT NOTICE. THE PRODUCTS DESCRIBED HEREIN AND THIS DOCUMENT ARE SUBJECT TO SPECIFIC DISCLAIMERS, SET FORTH AT www.vishay.com/doc?91000

ABSOLUTE MAXIMUM RATINGS (T_{amb} = 25 °C, unless otherwise specified)				
PARAMETER	**CONDITION**	**SYMBOL**	**VALUE**	**UNIT**
INPUT				
Reverse voltage		V_R	5	V
Forward current		I_F	25	mA
Peak forward current	t = 1 ms, duty cycle 50 %	I_{FSM}	50	mA
Maximum surge forward current	t ≤ 1 µs, 300 pulses/s		1	A
Thermal resistance		R_{th}	700	K/W
Power dissipation	T_{amb} = 70 °C	P_{diss}	45	mW
OUTPUT				
Supply voltage		V_S	-0.5 to 15	V
Output voltage		V_O	-0.5 to 15	V
Emitter base voltage		V_{EBO}	5	V
Output current		I_O	8	mA
Maximum output current			16	mA
Base current		I_B	5	mA
Thermal resistance			300	K/W
Power dissipation	T_{amb} = 70 °C	P_{diss}	100	mW
COUPLER				
Storage temperature range		T_{stg}	-55 to +150	°C
Ambient temperature range		T_{amb}	-55 to +100	°C
Soldering temperature	max. ≤ 10 s, dip soldering ≥ 0.5 mm from case bottom	T_{sld}	260	°C

Note

- Stresses in excess of the absolute maximum ratings can cause permanent damage to the device. Functional operation of the device is not implied at these or any other conditions in excess of those given in the operational sections of this document. Exposure to absolute maximum ratings for extended periods of the time can adversely affect reliability.

ELECTRICAL CHARACTERISTICS (T_{amb} = 25 °C, unless otherwise specified)							
PARAMETER	**TEST CONDITION**	**PART**	**SYMBOL**	**MIN.**	**TYP.**	**MAX.**	**UNIT**
INPUT							
Forward voltage	I_F = 16 mA		V_F	-	1.33	1.9	V
Breakdown voltage	I_R = 10 µA		V_{BR}	5	-	-	V
Reverse current	V_R = 5 V		I_R	-	0.5	10	µA
Capacitance	V_R = 0 V, f = 1 MHz		C_O	-	30	-	pF
Temperature coefficient, forward voltage	I_F = 16 mA		$\Delta V_F/\Delta T_A$	-	-1.7	-	mV/°C
OUTPUT							
Logic low supply current	I_F = 16 mA, V_O = open, V_{CC} = 15 V		I_{CCL}	-	150	-	µA
Logic high supply current	I_F = 0 mA, V_O = open, V_{CC} = 15 V		I_{CCH}	-	0.01	1	µA
Output voltage, output low	I_F = 16 mA, I_O = 1.1 mA, V_{CC} = 4.5 V	6N135	V_{OL}	-	0.1	0.4	V
	I_F = 16 mA, I_O = 3.0 mA, V_{CC} = 4.5 V	6N136	V_{OL}	-	0.1	0.4	V
Output current, output high	I_F = 0 mA, V_O = V_{CC} = 5.5 V		I_{OH}	-	3	500	nA
	I_F = 0 mA, V_O = V_{CC} = 15 V		I_{OH}	-	0.01	1	µA
COUPLER							
Capacitance (input to output)	f = 1 MHz		C_{IO}	-	0.6	-	pF

Note

- Minimum and maximum values are testing requirements. Typical values are characteristics of the device and are the result of engineering evaluation. Typical values are for information only and are not part of the testing requirements.

For technical questions, contact: optocoupleranswers@vishay.com
THIS DOCUMENT IS SUBJECT TO CHANGE WITHOUT NOTICE. THE PRODUCTS DESCRIBED HEREIN AND THIS DOCUMENT ARE SUBJECT TO SPECIFIC DISCLAIMERS, SET FORTH AT www.vishay.com/doc?91000

CURRENT TRANSFER RATIO (T_{amb} = 25 °C, unless otherwise specified)							
PARAMETER	**TEST CONDITION**	**PART**	**SYMBOL**	**MIN.**	**TYP.**	**MAX.**	**UNIT**
Current transfer ratio	I_F = 16 mA, V_O = 0.4 V, V_{CC} = 4.5 V	6N135	CTR	7	16	-	%
		6N136	CTR	19	35	-	%
	I_F = 16 mA, V_O = 0.5 V, V_{CC} = 4.5 V	6N135	CTR	5	-	-	%
		6N136	CTR	15	-	-	%

SWITCHING CHARACTERISTICS (T_{amb} = 25 °C, unless otherwise specified)							
PARAMETER	**TEST CONDITION**	**PART**	**SYMBOL**	**MIN.**	**TYP.**	**MAX.**	**UNIT**
High to low	I_F = 16 mA, V_{CC} = 5 V, R_L = 4.1 kΩ	6N135	t_{PHL}	-	0.3	1.5	µs
	I_F = 16 mA, V_{CC} = 5 V, R_L = 1.9 kΩ	6N136	t_{PHL}	-	0.2	0.8	µs
Low to high	I_F = 16 mA, V_{CC} = 5 V, R_L = 4.1 kΩ	6N135	t_{PLH}	-	0.3	1.5	µs
	I_F = 16 mA, V_{CC} = 5 V, R_L = 1.9 kΩ	6N136	t_{PLH}	-	0.2	0.8	µs

COMMON MODE TRANSIENT IMMUNITY (T_{amb} = 25 °C, unless otherwise specified)							
PARAMETER	**TEST CONDITION**	**PART**	**SYMBOL**	**MIN.**	**TYP.**	**MAX.**	**UNIT**
High	I_F = 0 mA, V_{CM} = 10 V_{P-P}, V_{CC} = 5 V, R_L = 4.1 kΩ	6N135	$\|CM_H\|$	-	1000	-	V/µs
	I_F = 0 mA, V_{CM} = 10 V_{P-P}, V_{CC} = 5 V, R_L = 1.9 kΩ	6N136	$\|CM_H\|$	-	1000	-	V/µs
Low	I_F = 16 mA, V_{CM} = 10 V_{P-P}, V_{CC} = 5 V, R_L = 4.1 kΩ	6N135	$\|CM_L\|$	-	1000	-	V/µs
	I_F = 16 mA, V_{CM} = 10 V_{P-P}, V_{CC} = 5 V, R_L = 1.9 kΩ	6N136	$\|CM_L\|$	-	1000	-	V/µs

SAFETY AND INSULATION RATINGS				
PARAMETER	**TEST CONDITION**	**SYMBOL**	**VALUE**	**UNIT**
Climatic classification	According to IEC 68 part 1		55 / 100 / 21	
Pollution degree	According to DIN VDE 0109		2	
Comparative tracking index	Insulation group IIIa	CTI	175	
Maximum rated withstanding isolation voltage	According to UL1577, t = 1 min	V_{ISO}	5300	V_{RMS}
Maximum transient isolation voltage	According to DIN EN 60747-5-5	V_{IOTM}	8000	V_{peak}
Maximum repetitive peak isolation voltage	According to DIN EN 60747-5-5	V_{IORM}	890	V_{peak}
Isolation resistance	T_{amb} = 25 °C, V_{IO} = 500 V	R_{IO}	≥ 10^{12}	Ω
	T_{amb} = 100 °C, V_{IO} = 500 V	R_{IO}	≥ 10^{11}	Ω
Output safety power		P_{SO}	500	mW
Input safety current		I_{SI}	300	mA
Input safety temperature		T_S	175	°C
Creepage distance	DIP-8		≥ 7	mm
Clearance distance	DIP-8		≥ 7	mm
Creepage distance	DIP-8, 400 mil, option 6		≥ 8	mm
Clearance distance	DIP-8, 400 mil, option 6		≥ 8	mm
Creepage distance	SMD-8, option 7		≥ 8	mm
Clearance distance	SMD-8, option 7		≥ 8	mm
Creepage distance	SMD-8, option 9		≥ 8	mm
Clearance distance	SMD-8, option 9		≥ 8	mm
Insulation thickness		DTI	≥ 0.4	mm

Note

- As per IEC 60747-5-5, § 7.4.3.8.2, this optocoupler is suitable for “safe electrical insulation” only within the safety ratings. Compliance with the safety ratings shall be ensured by means of protective circuits.

For technical questions, contact: optocoupleranswers@vishay.com
THIS DOCUMENT IS SUBJECT TO CHANGE WITHOUT NOTICE. THE PRODUCTS DESCRIBED HEREIN AND THIS DOCUMENT ARE SUBJECT TO SPECIFIC DISCLAIMERS, SET FORTH AT www.vishay.com/doc?91000

TYPICAL CHARACTERISTICS (T_{amb} = 25 °C, unless otherwise specified)

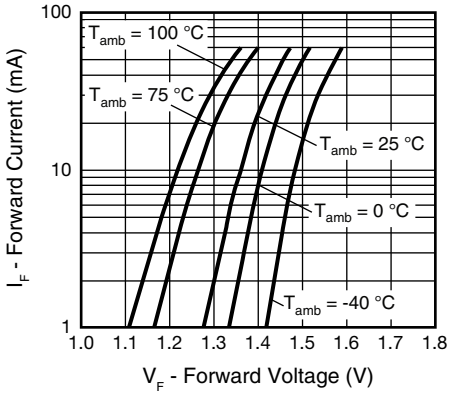

Fig. 1 - LED Forward Current vs. Forward Voltage

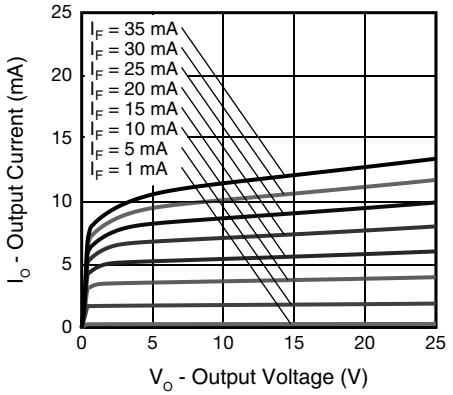

Fig. 4 - Output Current vs. Output Voltage

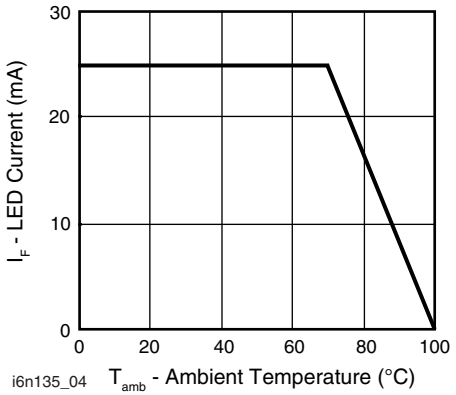

Fig. 2 - Permissible Forward LED Current vs. Temperature

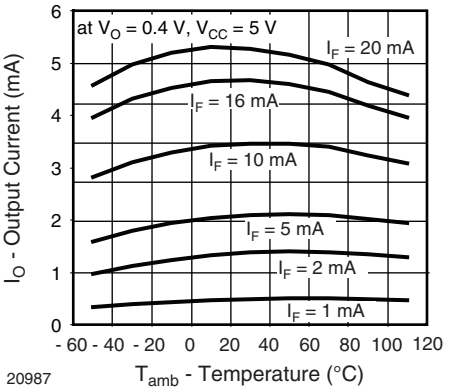

Fig. 5 - Output Current vs. Temperature

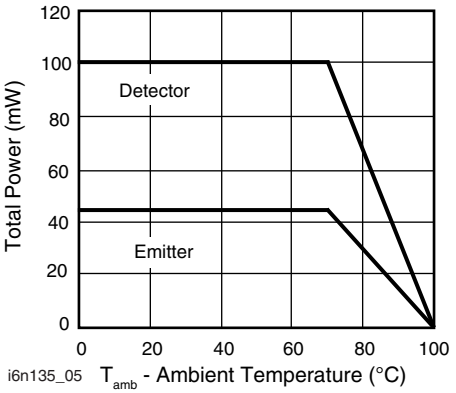

Fig. 3 - Permissible Power Dissipation vs. Temperature

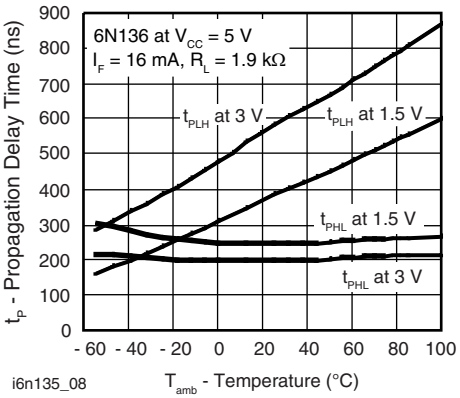

Fig. 6 - Propagation Delay vs. Ambient Temperature

For technical questions, contact: optocoupleranswers@vishay.com
THIS DOCUMENT IS SUBJECT TO CHANGE WITHOUT NOTICE. THE PRODUCTS DESCRIBED HEREIN AND THIS DOCUMENT ARE SUBJECT TO SPECIFIC DISCLAIMERS, SET FORTH AT www.vishay.com/doc?91000

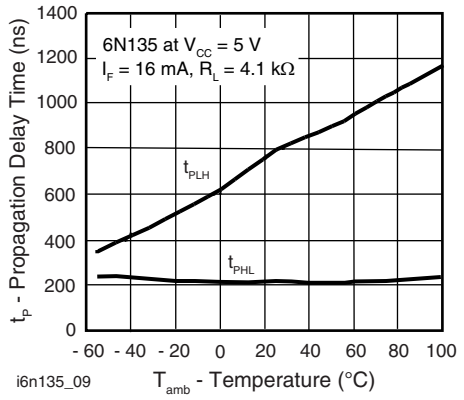

Fig. 7 - Propagation Delay vs. Ambient Temperature

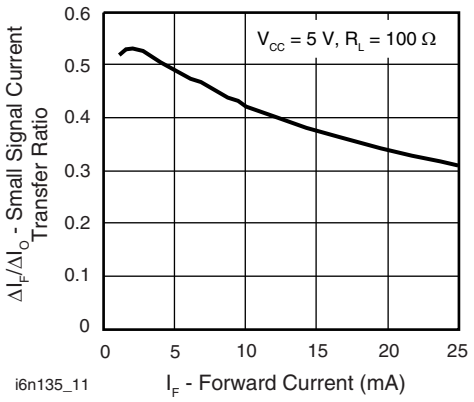

Fig. 9 - Small Signal Current Transfer Ratio vs. Quiescent Input Current

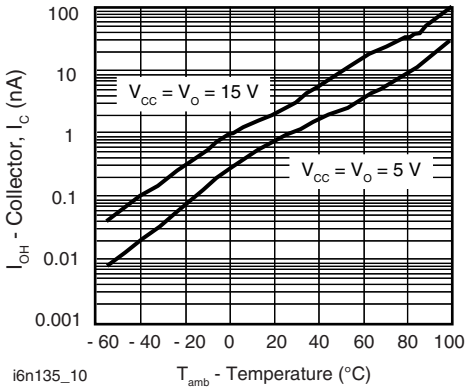

Fig. 8 - Logic High Output Current vs. Temperature

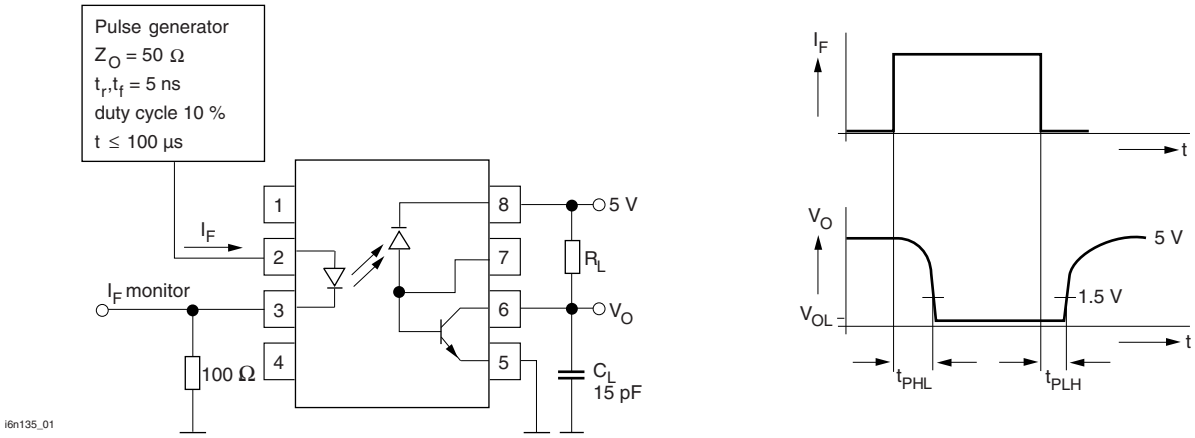

Fig. 10 - Switching Times

For technical questions, contact: optocoupleranswers@vishay.com
THIS DOCUMENT IS SUBJECT TO CHANGE WITHOUT NOTICE. THE PRODUCTS DESCRIBED HEREIN AND THIS DOCUMENT ARE SUBJECT TO SPECIFIC DISCLAIMERS, SET FORTH AT www.vishay.com/doc?91000

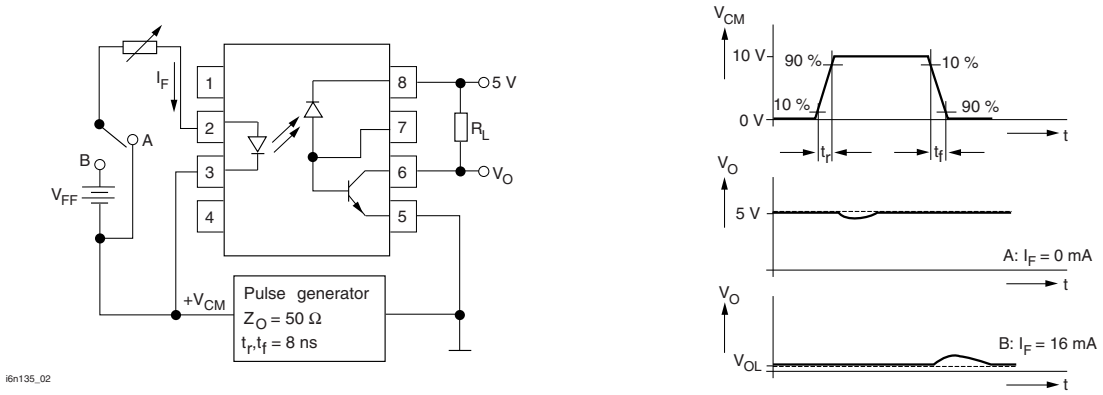

Fig. 11 - Common-Mode Interference Immunity

PACKAGE DIMENSIONS (in millimeters)

DIP-8, Standard

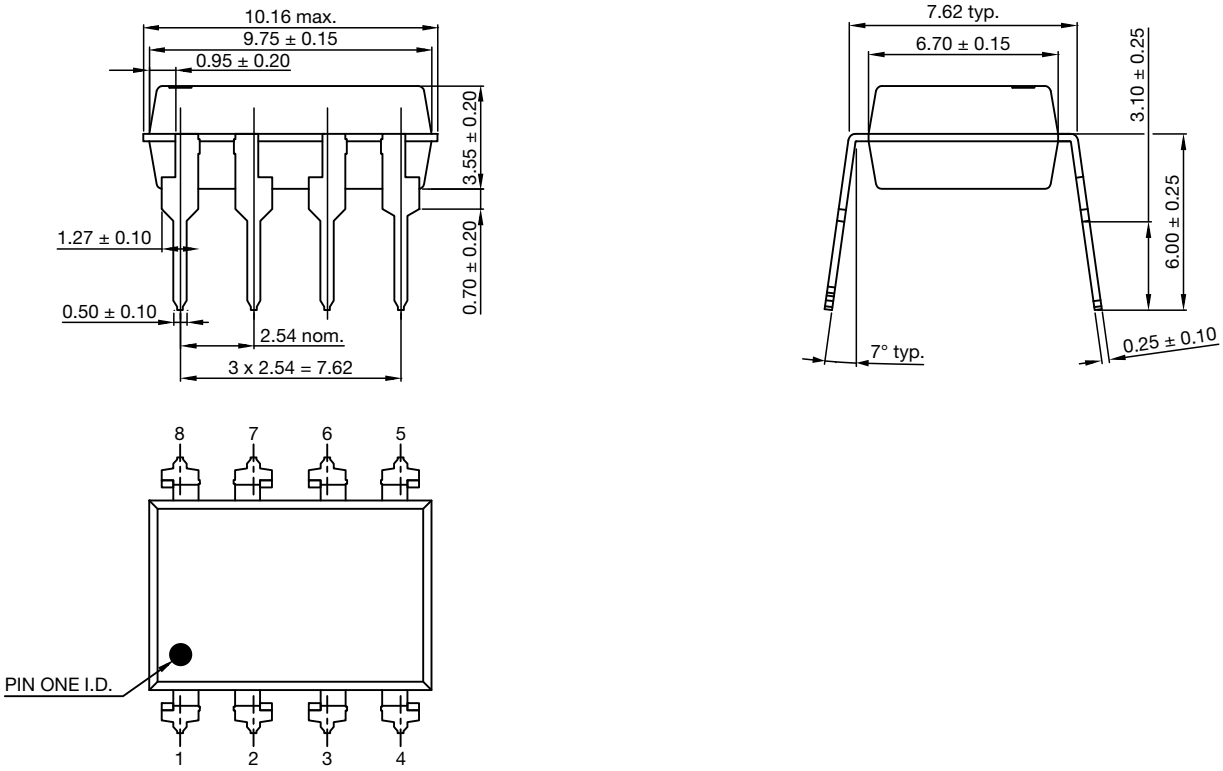

For technical questions, contact: optocoupleranswers@vishay.com
THIS DOCUMENT IS SUBJECT TO CHANGE WITHOUT NOTICE. THE PRODUCTS DESCRIBED HEREIN AND THIS DOCUMENT ARE SUBJECT TO SPECIFIC DISCLAIMERS, SET FORTH AT www.vishay.com/doc?91000

DIP-8, Option 6

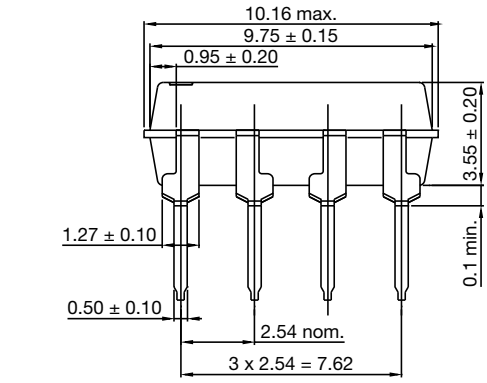

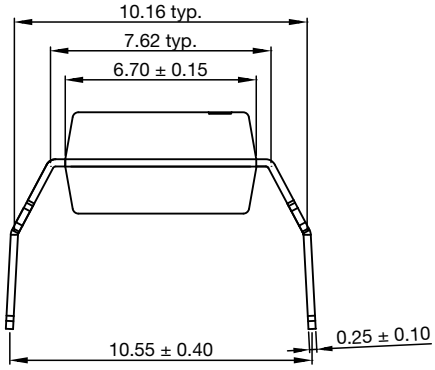

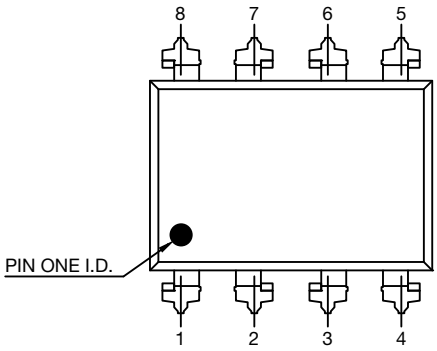

DIP-8, Option 7

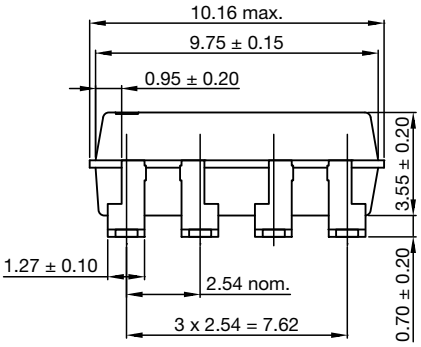

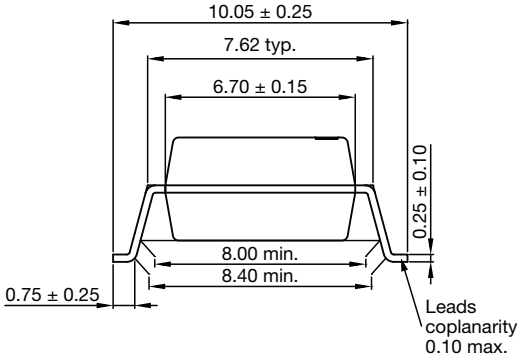

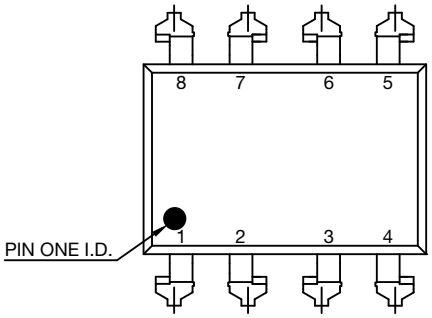

Recommended Footprint

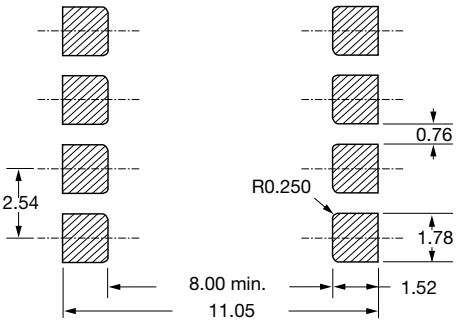

For technical questions, contact: optocoupleranswers@vishay.com
THIS DOCUMENT IS SUBJECT TO CHANGE WITHOUT NOTICE. THE PRODUCTS DESCRIBED HEREIN AND THIS DOCUMENT ARE SUBJECT TO SPECIFIC DISCLAIMERS, SET FORTH AT www.vishay.com/doc?91000

DIP-8, Option 9

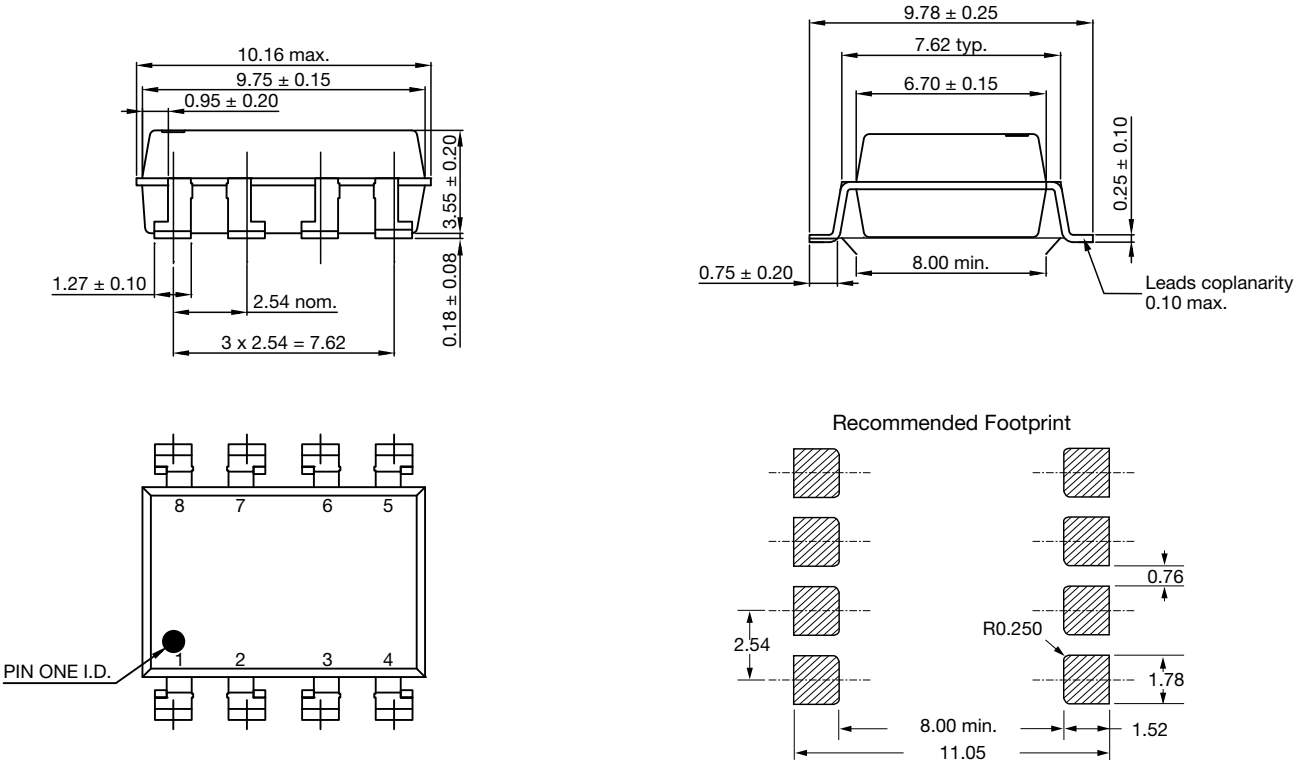

PACKAGE MARKING

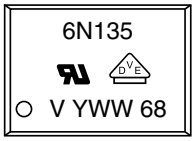

Fig. 12 - 6N135

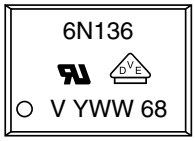

Fig. 13 - 6N136

Notes

- The VDE logo is only marked on option 1 parts.
- Tape and reel suffix (T) is not part of the package marking.

SOLDER PROFILES

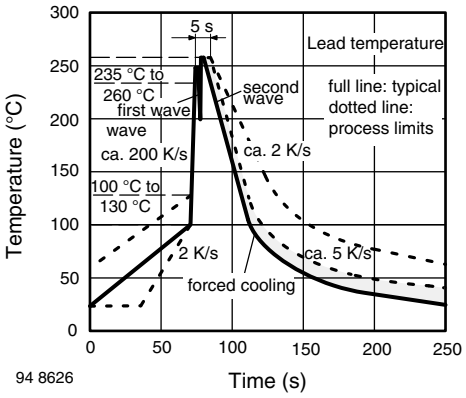

Fig. 14 - Wave Soldering Double Wave Profile According to J-STD-020 for DIP-8 Devices

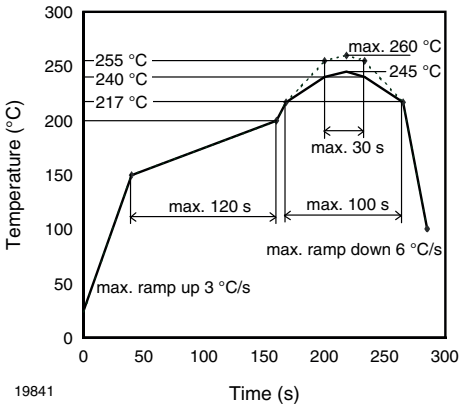

Fig. 15 - Lead (Pb)-free Reflow Solder Profile According to J-STD-020 for SMD-8 Devices

For technical questions, contact: optocoupleranswers@vishay.com
THIS DOCUMENT IS SUBJECT TO CHANGE WITHOUT NOTICE. THE PRODUCTS DESCRIBED HEREIN AND THIS DOCUMENT ARE SUBJECT TO SPECIFIC DISCLAIMERS, SET FORTH AT www.vishay.com/doc?91000

HANDLING AND STORAGE CONDITIONS

ESD level: HBM class 2

Floor life: unlimited

Conditions: T_{amb} < 30 °C, RH < 85 %

Moisture sensitivity level 1, according to J-STD-020

For technical questions, contact: optocoupleranswers@vishay.com
THIS DOCUMENT IS SUBJECT TO CHANGE WITHOUT NOTICE. THE PRODUCTS DESCRIBED HEREIN AND THIS DOCUMENT ARE SUBJECT TO SPECIFIC DISCLAIMERS, SET FORTH AT www.vishay.com/doc?91000

Disclaimer

ALL PRODUCT, PRODUCT SPECIFICATIONS AND DATA ARE SUBJECT TO CHANGE WITHOUT NOTICE TO IMPROVE RELIABILITY, FUNCTION OR DESIGN OR OTHERWISE.

Vishay Intertechnology, Inc., its affiliates, agents, and employees, and all persons acting on its or their behalf (collectively, “Vishay”), disclaim any and all liability for any errors, inaccuracies or incompleteness contained in any datasheet or in any other disclosure relating to any product.

Vishay makes no warranty, representation or guarantee regarding the suitability of the products for any particular purpose or the continuing production of any product. To the maximum extent permitted by applicable law, Vishay disclaims (i) any and all liability arising out of the application or use of any product, (ii) any and all liability, including without limitation special, consequential or incidental damages, and (iii) any and all implied warranties, including warranties of fitness for particular purpose, non-infringement and merchantability.

Statements regarding the suitability of products for certain types of applications are based on Vishay's knowledge of typical requirements that are often placed on Vishay products in generic applications. Such statements are not binding statements about the suitability of products for a particular application. It is the customer's responsibility to validate that a particular product with the properties described in the product specification is suitable for use in a particular application. Parameters provided in datasheets and / or specifications may vary in different applications and performance may vary over time. All operating parameters, including typical parameters, must be validated for each customer application by the customer's technical experts. Product specifications do not expand or otherwise modify Vishay's terms and conditions of purchase, including but not limited to the warranty expressed therein.

Hyperlinks included in this datasheet may direct users to third-party websites. These links are provided as a convenience and for informational purposes only. Inclusion of these hyperlinks does not constitute an endorsement or an approval by Vishay of any of the products, services or opinions of the corporation, organization or individual associated with the third-party website. Vishay disclaims any and all liability and bears no responsibility for the accuracy, legality or content of the third-party website or for that of subsequent links.

Except as expressly indicated in writing, Vishay products are not designed for use in medical, life-saving, or life-sustaining applications or for any other application in which the failure of the Vishay product could result in personal injury or death. Customers using or selling Vishay products not expressly indicated for use in such applications do so at their own risk. Please contact authorized Vishay personnel to obtain written terms and conditions regarding products designed for such applications.

No license, express or implied, by estoppel or otherwise, to any intellectual property rights is granted by this document or by any conduct of Vishay. Product names and markings noted herein may be trademarks of their respective owners.

© 2021 VISHAY INTERTECHNOLOGY, INC. ALL RIGHTS RESERVED