Honeywell

Representative photograph, actual product appearance may vary.

Due to regional agency approval requirements, some products may not be available in your area. Please contact your regional Honeywell office regarding your product of choice.

CSLA2CD

CSLA Series linear current sensor, 72 A sensed current, sink or source output, through-hole, operates on AC or DC current, bottom mount

Features

- Linear output
- AC or DC current sensing
- Through-hole design
- Fast response time
- Output voltage isolation from input
- Minimum energy dissipation
- Maximum current limited only by conductor size
- Adjustable performance and built-in temperature compensation assures reliable operation
- Accurate, low cost sensing
- Operating temperature range -25 °C to 85 °C
- Housing: PBT polyester

Typical Applications

- Variable speed drives
- Overcurrent protection
- Ground fault detectors
- Current feedback control systems
- Robotics
- UPS and telecommunication power supplies
- Welding power supplies
- Automotive - Battery management systems
- Wattmeters

Description

Honeywell CS series linear current sensors incorporate our 91SS12-2 and SS94A1 linear output Hall effect transducter (LOHET™). The sensing element is assembled in a printed circuit board mountable housing. This housing is available in four configurations. Normal mounting is with 0.375 inch long 4-40 screw and square nut (not provided) inserted in the housing or a 6-20 self-tapping screw. The combination of the sensor, flux collector, and housing comprises the holder assembly. These sensors are ratiometric.

Honeywell

CSLA2CD

CSLA Series linear current sensor, 72 A sensed current, sink or source output, through-hole, operates on AC or DC current, bottom mount

Product Specifications	
Sensor Type	Open Loop Linear
Sensed Current Type	ac or dc
Sensed Current Range	0 A to 72 A
Package Style	PCB Bottom Mount
Output Type	Voltage
Sensitivity	32.7 mV N* ± 3.0 @ 8 Vdc
Supply Current	20 mA max.
Offset Voltage	Vcc/2 ± 2 %
Supply Voltage	5.4 Vdc to 13.2 Vdc
Offset Shift (% / °C)	± 0.02
Response Time	3 µs
Operating Temperature Range	-25 °C to 85 °C [-13 °F to 185 °F]
Storage Temperature Range	-40 °C to 100°C [-40 °F to 212 °F]
Housing Material	PBT Polyester
Mounting	PCB on 3 pins
Pinout Style	3 pin
Availability	Global

Comment	* N = Number of Turns
UNSPSC Code	411121
UNSPSC Commodity	411121 Transducers
Series Name	CSLA Series

Honeywell

CSLA2CD

CSLA Series linear current sensor, 72 A sensed current, sink or source output, through-hole, operates on AC or DC current, bottom mount

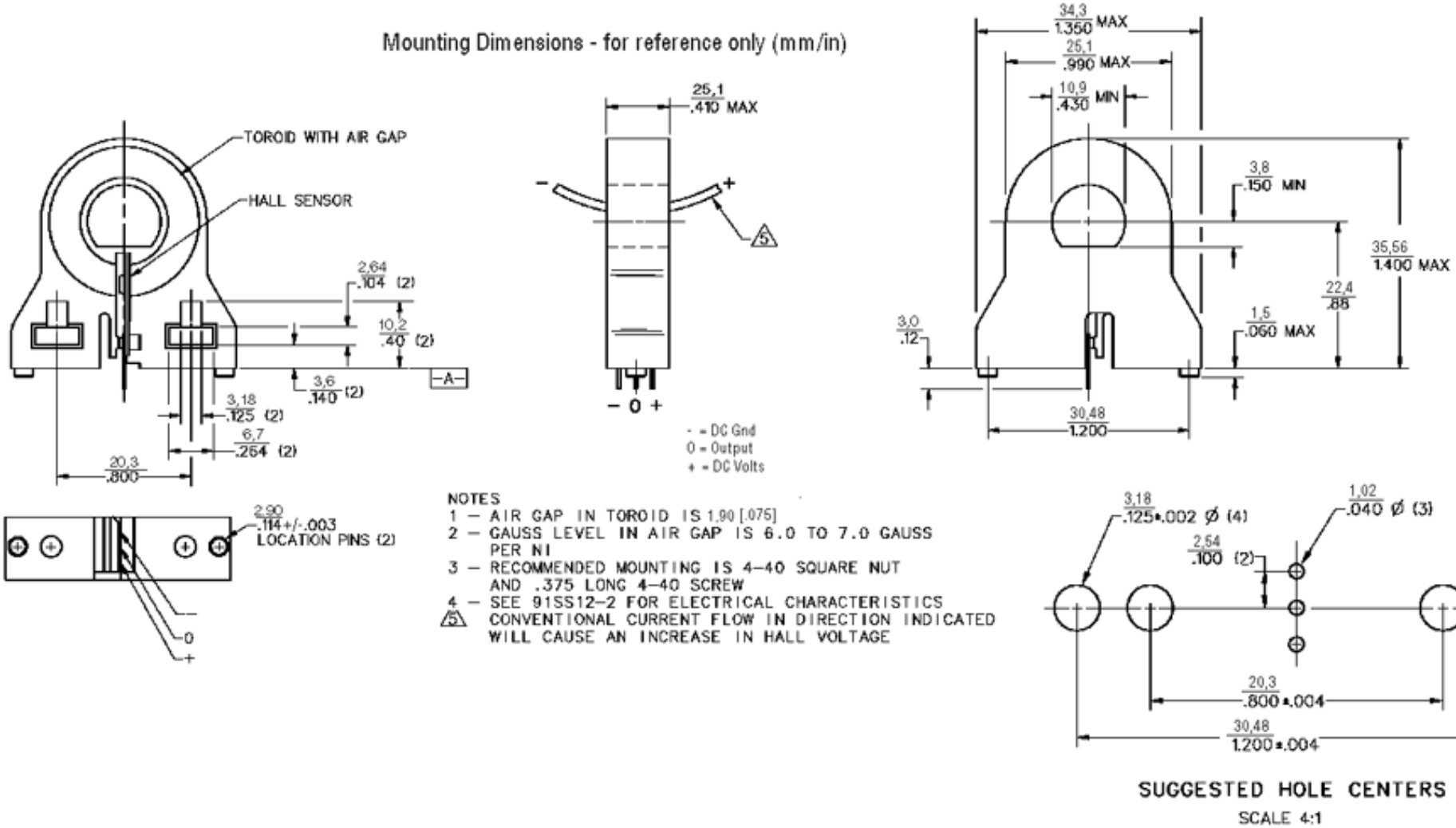

Honeywell

CSLA2CD

CSLA Series linear current sensor, 72 A sensed current, sink or source output, through-hole, operates on AC or DC current, bottom mount

WARNING

PERSONAL INJURY

DO NOT USE these products as safety or emergency stop devices, or in any other application where failure of the product could result in personal injury.

Failure to comply with these instructions could result in death or serious injury.

WARNING

MISUSE OF DOCUMENTATION

- The information presented in this product sheet (or catalog) is for reference only. DO NOT USE this document as product installation information.
- Complete installation, operation and maintenance information is provided in the instructions supplied with each product.

Failure to comply with these instructions could result in death or serious injury.

© Copyright Honeywell Inc.1998-2004 All rights reserved.